Journal of International Conference Proceedings (JICP)
Vol. 9 No. 5, pp 603-613, November, 2026
E-ISSN: 2621-993X P-ISSN: 2622-0989
https://ejournal.aibpmjournals.com/index.php/JICP/index

The Effect of Financial Literacy and Lifestyle on Personal Financial Management of Generation Z in Oko-Oko Village, Pomalaa District

Fria Firmayani[1*], Sasmita Nabila Syahrir[1], Nichen[1]
[1]Universitas Sembilanbelas November Kolaka
Jl. Pemuda No. 339, Kolaka District, Southeast Sulawesi 93517, Indonesia
*Corresponding Email: friafirmayani2002@gmail.com

ARTICLE INFORMATION

Publication information

Research article

HOW TO CITE
Firmayani, F., Syahrir, S. N., & Nichen, N. (2026). The effect of financial literacy and lifestyle on personal financial management of Generation Z in Oko-Oko Village, Pomalaa District. *Journal of International Conference Proceedings*, *9*(5), 603-613.

DOI:
https://doi.org/10.32535/jicp.v9i5.5219

Copyright @ 2026 owned by Author(s).
Published by JCIP

This is an open-access article.
License:
Attribution-Noncommercial-Share Alike
(CC BY-NC-SA)

Received: 12 September 2026
Accepted: 15 October 2026
Published: 26 November 2026

ABSTRACT

Focusing on Generation Z residents of Oko-Oko Village, Pomalaa District, Kolaka Regency, Southeast Sulawesi, this study examines how personal financial management is influenced by two factors: financial literacy and lifestyle. Following a quantitative approach, questionnaires were distributed to 100 Generation Z respondents selected using purposive sampling, and the resulting data were analyzed using Partial Least Squares–Structural Equation Modeling (PLS-SEM) with SmartPLS 4. The analysis shows a positive and significant effect of financial literacy on personal financial management ($b = 0.652$, $t = 11.939$, $p < 0.001$), indicating that respondents with stronger financial literacy tend to manage their personal finances better. A negative and significant effect is found for lifestyle ($b = -0.201$, $t = 2.634$, $p = 0.008$), indicating that the higher the level of lifestyle, the lower the level of personal financial management. Together, these two predictors account for 50.9% of the variance in personal financial management ($R^2 = 0.509$), while the remaining 49.1% is explained by factors outside the model. Overall, the results indicate that strengthening financial literacy remains important for Generation Z, while lifestyle needs to be controlled to prevent it from negatively affecting their financial well-being over time.

Keywords: Financial Literacy; Generation Z; Lifestyle; Personal Financial Management

INTRODUCTION

The quick advancement of information technology and the digitization of financial services have significantly altered how people handle their own money. The ease of access to a variety of financial services and goods, including online shopping platforms, digital wallets, and PayLater services, presents both opportunities and problems for people to manage their money sensibly (Imanda & Ali, 2025).

Those born between 1997 and 2012 are referred to as Generation Z (Rohmad et al., 2025). With roughly 74.93 million members, or 27.94% of the nation's total population, Generation Z is Indonesia's largest generational cohort, according to Statistics Indonesia (Badan Pusat Statistik [BPS], 2021). Because of their enormous population, Generation Z is a crucial demographic to study, especially when it comes to personal financial management and financial behavior.

Personal financial management involves the way individuals handle their financial resources to accomplish their life objectives, which includes aspects like financial planning, money handling, and debt control (Tanoni et al., 2025). Having adequate knowledge and skills in financial management is crucial for individuals to make suitable and well-informed financial choices (Nuraisyah et al., 2025). Nevertheless, Ardyansyah and Indrawati (2024) discovered that Generation Z in Indonesia tends to emphasize consumption over long-term financial strategies in their personal financial management. This situation suggests that younger generations' personal financial management remains insufficient and needs more attention.

One of the factors that may influence personal financial management is financial literacy. Financial literacy refers to an individual's ability to understand and effectively apply financial knowledge and skills, including managing personal finances, preparing budgets, and making investment decisions (Elaine et al., 2025). Individuals with adequate financial literacy are more capable of developing appropriate financial plans, managing their financial resources effectively, and identifying various financial problems, such as excessive debt and potential financial fraud (Dwitri et al., 2025). According to a study by Sun Life Indonesia (2025), Generation Z is considered one of the most financially vulnerable generations, with only 49% reporting confidence in their financial condition. They also tend to focus more on short-term financial plans and demonstrate relatively lower levels of financial literacy. These conditions highlight the importance of examining financial literacy as a factor associated with the financial management behavior of Generation Z.

In addition to financial literacy, lifestyle is another factor that may influence personal financial management. Lifestyle refers to the way individuals live their lives, as reflected in their activities, interests, attitudes, consumption patterns, and expectations, and is closely related to how they allocate their time, money, and energy (Lestari et al., 2025). Contemporary lifestyle phenomena among younger generations are also reflected in the emergence of Fear of Missing Out (FoMO) and You Only Live Once (YOLO) tendencies. FoMO refers to feelings of anxiety or concern about being left behind by trends, experiences, or lifestyles that are currently popular or being followed by others. Meanwhile, YOLO represents a lifestyle orientation that emphasizes present enjoyment and immediate satisfaction without sufficiently considering potential risks or future consequences (Wiyanto et al., 2022). Such lifestyle tendencies may encourage excessive consumption and potentially hinder individuals' ability to manage their finances effectively.

The issues of financial literacy and lifestyle among Generation Z in Oko-Oko Village, Pomalaa District, therefore warrant particular attention. Oko-Oko Village is one of the villages in Pomalaa District, an area known for its nickel mining activities. The development of industrial activities in the region has contributed to increased household income and economic opportunities for the local community, including younger individuals who are increasingly gaining access to and control over economic resources. Based on preliminary observations conducted in Oko-Oko Village, Pomalaa District, the Generation Z population consists of 644 individuals, comprising 350 males and 294 females. This demographic condition provides a relevant context for examining how financial literacy and lifestyle are associated with personal financial management among Generation Z in a community experiencing economic development driven by mining activities.

Previous research has shown varied results regarding the impact of financial literacy and lifestyle on managing personal finances. Putri and Azib (2023) concluded that financial literacy positively and significantly influences financial management. Conversely, Gunawan and Herlina (2025) found that financial literacy does not significantly impact financial management. Similar discrepancies are evident in studies related to lifestyle. Gama et al. (2023) discovered that lifestyle positively influences the ability to manage finances, while Pambunan et al. (2025) indicated that lifestyle does not have a significant impact on financial management ability. These conflicting results highlight an empirical gap and suggest the need for additional research to investigate the connection between financial literacy, lifestyle, and personal financial management, especially among Generation Z in specific local contexts.

This study is important because younger generations, particularly Generation Z in Oko-Oko Village, Pomalaa District, are expected to become an important component of future local economic development. Effective financial management from an early age may contribute to greater household financial stability and, in the longer term, support the economic development of the local community. Therefore, examining the factors associated with personal financial management among Generation Z is relevant not only from an individual perspective but also from a broader socioeconomic perspective. The findings of this study are expected to provide empirical contributions to the development of financial education programs and to encourage healthier financial management behavior among Generation Z.

LITERATURE REVIEW

Theory of Planned Behavior (TPB)

The Theory of Planned Behavior (TPB) is an extension of the Theory of Reasoned Action (TRA) developed by Ajzen (1985) through his article entitled “From Intentions to Actions: A Theory of Planned Behavior.” The theory was developed to explain individual behavior that is not entirely under volitional control. Therefore, behavioral intention alone is insufficient to fully explain an individual's actual behavior. According to the TPB, individual behavior is directly influenced by behavioral intention, while behavioral intention is determined by three main factors: attitude toward the behavior, subjective norm, and perceived behavioral control (Ghozali, 2020).

Within the framework of TPB, financial literacy is closely associated with perceived behavioral control, as individuals with adequate financial literacy are expected to have greater knowledge, ability, and confidence to manage their personal finances and make appropriate financial decisions. Higher financial literacy may strengthen an individual's perceived ability to control financial behavior, particularly in planning, allocating, and managing financial resources.

Meanwhile, lifestyle can be associated with subjective norms, which refer to perceived social pressure or the influence of the surrounding environment that may shape an individual's behavioral decisions. In the context of personal financial management, lifestyle may be influenced by social interactions, peer influence, consumption trends, and individual perceptions regarding appropriate lifestyles. These influences may encourage individuals to adopt certain consumption patterns, including consumptive behavior, which may subsequently affect how they manage their personal finances.

Hypotheses Development

Financial Literacy

Muslimin and Utami (2025) define financial literacy as an individual's skill to comprehend and utilize fundamental financial concepts in daily life, such as financial planning, savings, investing, managing debt, and choosing suitable financial products and services. In a similar manner, Saputro et al. (2022) characterize financial literacy as an amalgamation of knowledge, skills, and beliefs that can shape a person's attitudes and actions when making financial management choices to attain financial well-being.

A study by Putri and Azib (2023) indicated that financial literacy positively and significantly influences the financial management behavior of Generation Z. This result aligns with the research by Putri et al. (2024), which expressed that a person's financial literacy level signifies a thorough comprehension of diverse financial matters, thus facilitating effective and suitable decision-making in personal financial management. Their research indicated that financial literacy positively and significantly influences the financial management of Generation Z. Conversely, Pambunan et al. (2025) reported differing results, finding that financial literacy does not significantly affect the financial management of Generation Z.

H1: Financial literacy has a positive effect on the personal financial management of Generation Z in Oko-Oko Village, Pomalaa District.

Lifestyle

According to Kurniawan (2024), lifestyle is defined as an individual's pattern of living, including activities, interests, and values that contribute to the formation of their identity. In addition, Murtiningsih and Marlapa (2025) describe lifestyle as the way individuals select and compare their personal experiences with social realities, which influences their decisions regarding actions and appearances that are considered appropriate or inappropriate within the social environment in which they interact.

Research by Putri et al. (2024) showed that lifestyle positively and significantly influences the personal financial management of Generation Z. Those who maintain a well-organized lifestyle are viewed as more adept at handling their finances prudently. Comparable results were observed by Gama et al. (2023), revealing that lifestyle positively influences the financial management skills of Generation Z students.

H2: Lifestyle has a positive effect on the personal financial management of Generation Z in Oko-Oko Village, Pomalaa District.

Personal Financial Management

According to Lestari (2020), personal financial management refers to the study of how individuals and families manage their financial resources to achieve financial success, including the management of income, expenses, savings, and investments. Similarly, Judijanto et al. (2025) stated that personal financial management reflects an individual's

ability to manage income and expenditures in order to meet current needs without creating financial problems in the future.

Research by Putri and Azib (2023) indicated that financial literacy and lifestyle positively and significantly impact personal financial management simultaneously. This discovery implies that financial expertise and abilities, along with lifestyle habits, might collectively enhance a person's capacity to manage personal financial resources successfully.

H3: Financial literacy and lifestyle simultaneously have an effect on the personal financial management of Generation Z in Oko-Oko Village, Pomalaa District.

Conceptual Framework
The study framework model is depicted in Figure 1.

Figure 1. Research Framework

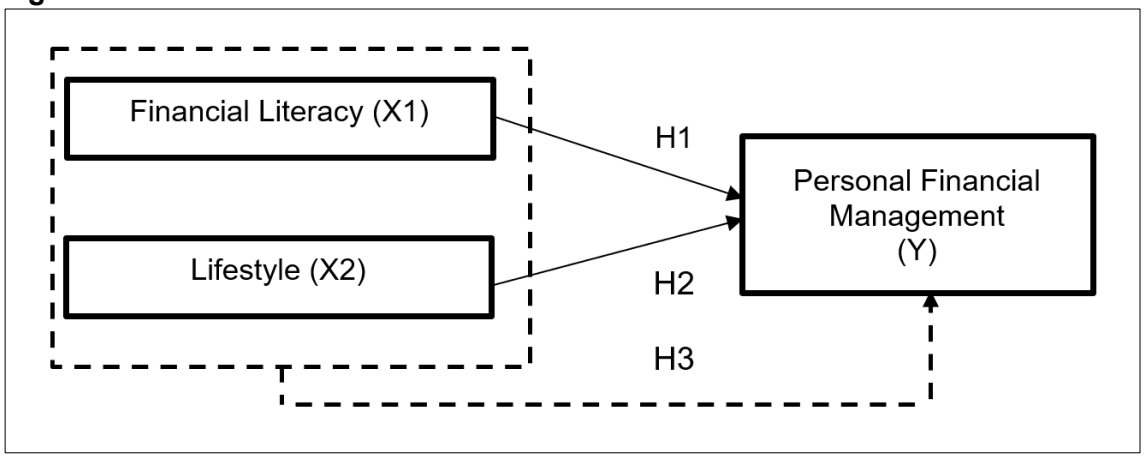

RESEARCH METHOD

This quantitative study, conducted in Oko-Oko Village, Pomalaa District, Kolaka Regency, Southeast Sulawesi Province, sampled its population from 644 Generation Z individuals born between 1997 and 2012. Purposive sampling, a method of non-probability sampling, was utilized to choose participants. Hair et al.'s (2021) guideline suggests a sample size of five to ten times the number of indicators and was employed to ascertain the minimum sample size. The minimum sample size required for the model with ten indicators was 100 respondents (10 × 10). The requirements for eligibility involved being part of Generation Z, living in Oko-Oko Village, earning income from a job, a business, or a consistent allowance, and agreeing to fill out the questionnaire.

A five-point Likert scale, where 1 = strongly disagree and 5 = strongly agree, was utilized in the survey to gather primary data regarding financial literacy, lifestyle, and personal financial management. Primary data were additionally backed by direct observation and record-keeping. Secondary data were gathered from books, academic journal articles, and official documents.

The analysis of the data was conducted using SmartPLS 4 in accordance with the Partial Least Squares–Structural Equation Modeling (PLS-SEM) method. The outer model was assessed for convergent validity, showing factor loadings and Average Variance Extracted (AVE) exceeding 0.50; for discriminant validity, demonstrated by a Heterotrait–Monotrait (HTMT) ratio under 0.90; and for reliability, indicated by Composite Reliability and Cronbach's Alpha greater than 0.70. The inner model was assessed through the coefficient of determination (R^2), where values of 0.25, 0.50, and 0.75 represented weak,

moderate, and strong explanatory abilities, respectively, along with path coefficients that varied from −1 to +1 (Hair et al., 2021). Bootstrapping was utilized for hypothesis testing, where statistical significance was established by a t-statistic exceeding 1.96 and a p-value lower than 0.05 at the 5% significance threshold. Table 1 lays out how each research variable and its indicators are operationally defined.

Table 1. Operational Definition of Variables

Variable	Indicators	Operational Definition
Financial Literacy (X1)	Financial knowledge, financial attitude, financial behavior.	An individual's ability to understand basic financial concepts and products, hold prudent financial attitudes such as valuing saving and budgeting, and demonstrate real actions such as recording expenses and paying obligations on time (Ariana et al., 2025).
Lifestyle (X2)	Activity, interest, opinion.	An individual's pattern of daily activity, personal interests (e.g., fashion, recreation), and opinions about self and social surroundings that shape consumption choices (Mukuan et al., 2023).
Personal Financial Management (Y)	Determination of fund sources, use of funds, risk management, future planning.	An individual's ability to identify sources of funds, allocate funds appropriately, anticipate financial risk, and plan for future financial needs (Melisa et al., 2023).

RESULTS

Respondent Characteristics

Table 2. Respondent Characteristics (N = 100)

Characteristic	Category	Frequency (n)	Percentage (%)
Gender	Male	38	38
	Female	62	62
Age	14–17 years	10	10
	18–22 years	35	35
	23–29 years	55	55
Education	Elementary school	4	4
	Junior high school	14	14
	Senior high school	60	60
	Diploma/Bachelor	22	22
Occupation	Private employee	37	37
	Other	23	23
	Student	21	21
	Self-employed	19	19
Monthly income	< IDR 500,000	20	20
	IDR 500,000–999,999	11	11
	IDR 1,000,000–2,999,999	10	10
	IDR 3,000,000–4,999,999	15	15
	> IDR 5,000,000	44	44

Table 2 lays out the full breakdown. Female respondents made up 62 percent of the 100-person sample, and 55 percent fell between 23 and 29 years old. Senior high school was the highest completed education for 60 percent, 37 percent worked as private-sector employees, and 44 percent earned above IDR 5,000,000 monthly, figures pointing to a sample weighted toward young adults already standing on their own financially.

Journal of International Conference Proceedings (JICP)
Vol. 9 No. 5, pp 603-613, November, 2026
E-ISSN: 2621-993X P-ISSN: 2622-0989
https://ejournal.aibpmjournals.com/index.php/JICP/index

Measurement Model (Outer Model)

Table 3. Convergent Validity and Reliability of the Measurement Model

Latent Variable	AVE	Composite Reliability	Cronbach's Alpha
Financial Literacy (X1)	0.503	0.874	0.831
Lifestyle (X2)	0.538	0.822	0.720
Personal Financial Management (Y)	0.511	0.838	0.758

Loadings cleared the 0.70 benchmark for most indicators, with a handful sitting in the 0.50–0.70 band, fine for exploratory work so long as AVE and reliability hold up at the construct level (Hair et al., 2021). Table 3's AVE figures, all above 0.50 for the three constructs, back up convergent validity. HTMT scores of 0.292 (Financial Literacy–Lifestyle), 0.839 (Financial Literacy–Personal Financial Management), and 0.420 (Lifestyle–Personal Financial Management) stayed under the 0.90 mark, backing discriminant validity too. Composite Reliability and Cronbach's Alpha both exceeded 0.70 for every construct, so the instrument holds up as reliable.

Structural Model (Inner Model)

Table 4. R-Square

Variable	R-square
Y. Personal Financial Management	0.509

As presented in Table 4, personal financial management's R^2 landed at 0.509; financial literacy and lifestyle jointly cover 50.9 percent of its variance, a moderate showing, with 49.1 percent left to unmodeled factors. Financial literacy's path to personal financial management carried a coefficient of 0.652 (positive), while lifestyle's carried -0.201 (negative). Table 5 lays out the bootstrapping numbers behind the hypothesis tests.

Table 5. Hypothesis Testing Results

Path	Original Sample (O)	T Statistics	P Values	Decision
Financial Literacy → Personal Financial Management	0.652	11.939	0.000	H1 accepted
Lifestyle → Personal Financial Management	-0.201	2.634	0.008	H2 rejected

As shown in Table 5, financial literacy clears both significance bars ($t = 11.939$, $p = 0.000$, against thresholds of $t > 1.96$ and $p < 0.05$), so H1 stands: financial literacy positively and significantly shapes personal financial management. Lifestyle clears the same bars ($t = 2.634$, $p = 0.008$) but with a negative coefficient, significant, yes, but running opposite to what H2 predicted, since stronger lifestyle orientation tracks with weaker, not stronger, financial management. The R^2 finding backs H3, tying financial literacy and lifestyle together as joint influences on personal financial management.

DISCUSSION

The Influence of Financial Literacy on Personal Financial Management

A path coefficient of 0.652 (t = 11.939, p = 0.000) indicates that financial literacy has a positive and significant effect on personal financial management among Generation Z in Oko-Oko Village, Pomalaa District. This means that Generation Z in Oko-Oko Village who possess better financial knowledge, attitudes, and behaviors tend to manage their personal finances more effectively. Descriptively, saving regularly drew the strongest agreement among respondents, and understanding financial institutions drew the highest agreement overall, hinting that both knowledge and saving habits carry real weight in shaping management ability. Ajzen's (1985) Theory of Planned Behavior fits this pattern: financial knowledge and confidence build attitudes and intentions, so someone more financially literate can better see why budgeting, saving, controlling spending, and planning ahead pay off. Putri and Azib (2023) reported the same positive, significant literacy effect among Generation Z, adding weight to financial literacy as a driver of sound money behavior in this age group.

The Influence of Lifestyle on Personal Financial Management

Lifestyle's path coefficient, -0.201 (t = 2.634, p = 0.008), indicates that lifestyle has a negative and significant effect on personal financial management among Generation Z in Oko-Oko Village, Pomalaa District. Descriptively, respondents leaned toward spending on entertainment and hanging out, chasing fashion trends, gravitating to recreational spots, and treating lifestyle spending as unremarkable; the more income these draws pull in, the less room there is for budgeting, saving, and planning, which explains the negative sign here. Khaliandri et al. (2025) reported a matching negative lifestyle effect, though this cuts against the study's original H2, which, building on work like Gama et al. (2023), expected a positive effect. That gap hints the lifestyle management relationship may depend on the consumption patterns and socioeconomic setting of whichever population gets studied.

The Simultaneous Effect of Financial Literacy and Lifestyle on Personal Financial Management

Simultaneously, financial literacy and lifestyle influence personal financial management among Generation Z in Oko-Oko Village, Pomalaa District. This is indicated by an R-square value of 0.509, meaning that the two variables in this study jointly explain 50.9% of the variance in personal financial management. Meanwhile, the remaining 49.1% is influenced by other factors outside the scope of this study.

CONCLUSION

Financial literacy has a positive and significant effect on personal financial management among Generation Z in Oko-Oko Village, Pomalaa District. This finding indicates that the higher an individual's level of financial literacy, the better their personal financial management tends to be. Knowledge of financial concepts, sound financial attitudes, and financial behaviors such as saving, paying obligations on time, and understanding the functions of financial institutions encourage individuals to manage their income, expenses, emergency funds, and financial planning more effectively. Therefore, the first hypothesis (H1) is accepted.

Lifestyle has a negative and significant effect on personal financial management among Generation Z in Oko-Oko Village, Pomalaa District. This finding indicates that the higher an individual's lifestyle orientation, the lower their ability to manage personal finances tends to be. The tendency to follow trends, prioritize wants over needs, and engage in highly consumptive activities leads to greater spending, resulting in less optimal financial

management. Therefore, the second hypothesis (H2) is rejected because the relationship obtained is negative.

Simultaneously, financial literacy and lifestyle influence personal financial management among Generation Z in Oko-Oko Village, Pomalaa District. This is indicated by an R-square value of 0.509, meaning that the two variables in this study explain 50.9% of the variance in personal financial management, while the remaining 49.1% is influenced by other factors outside the scope of this study.

ACKNOWLEDGMENT
Sincere thanks go to Sasmita Nabila Syahrir, S.E., M.Ak., Ak., CA., ACPA, and Nichen, S.E., M.Si., CTA., ACPA., CTM, who supervised this work as the first and second advisors, respectively, together with the examining committee and the Accounting Study Program, Faculty of Social Sciences and Economics, Universitas Sembilanbelas November Kolaka, for supporting this research throughout. The author also extends sincere gratitude to the Generation Z residents of Oko-Oko Village who participated as respondents.

DECLARATION OF CONFLICTING INTERESTS
The authors declare that there are no conflicts of interest related to the research or authorship of this article.

REFERENCES

Ajzen, I. (1985). From intentions to actions: A theory of planned behavior. In J. Kuhl & J. Beckmann (Eds.), *Action Control: From Cognition to Behavior* (pp. 11–39). Springer. https://doi.org/10.1007/978-3-642-69746-3_2

Ardyansyah, A. F., & Indrawati, N. K. (2024). Perception and practices of personal financial management among Generation Z in Indonesia. *Journal Research of Social Science, Economic, and Management, 3*(12), 1687–1698. https://doi.org/10.59141/jrssem.v3i12.687

Ariana, I. M., Aryaningsih, N. N., & Karma, I. G. M. (2025). *Peran Literasi Keuangan dan Digital dalam Meningkatkan Inklusi, Daya Saing, dan Resiliensi Keuangan UMKM.* Intelektual Manifes Media.

Badan Pusat Statistik. (2021, January 21). *Hasil Sensus Penduduk (SP2020) pada September 2020 Mencatat Jumlah Penduduk Sebesar 270,20 Juta Jiwa.* Badan Pusat Statistik. https://www.bps.go.id/id/pressrelease/2021/01/21/1854/hasil-sensus-penduduk-2020.html

Dwitri, A., & Pradikto, S. (2025). Pentingnya Literasi Keuangan Bagi Pengelolaan Keuangan Pribadi. *Jurnal Kajian dan Penelitian Umum, 3*(1), 99–106. https://doi.org/10.47861/jkpu-nalanda.v3i1.1505

Elaine, A., Dharma, E. K., & Amelinda, R. (2025). The impact of financial literacy, self-control, and digital payment usage on Generation Z's consumer behavior in West Jakarta. *Journal of International Conference Proceedings, 8*(1), 434–448. https://doi.org/10.32535/jicp.v8i1.3941

Gama, A. W. S., Buderini, L., & Astiti, N. P. Y. (2023). Pengaruh literasi keuangan, gaya hidup, dan pendapatan terhadap kemampuan pengelolaan keuangan pribadi mahasiswa Generasi Z. *Jurnal KRISNA: Kumpulan Riset Akuntansi*, *15*(1), 90–101. https://doi.org/10.22225/kr.15.1.2023.90-101

Ghozali, I. (2020). *25 Grand Theory: Teori Besar Ilmu Manajemen, Akuntansi dan Bisnis (Untuk Landasan Teori Skripsi, Tesis dan Disertasi).* Yoga Pratama.

Gunawan, B. P., & Herlina, H. (2025). Pengaruh literasi keuangan, kontrol diri, dan gaya hidup hedonisme terhadap pengelolaan keuangan Generasi Z. *Jurnal Ilmiah Ilmu Pendidikan*, *8*(5), 4917-4924. https://doi.org/10.54371/jiip.v8i5.7873

Hair, J. F., Hult, G. T. M., Ringle, C. M., Sarstedt, M., Danks, N. P., & Ray, S. (2021). *Partial Least Squares Structural Equation Modeling (PLS-SEM) Using R: A Workbook.* Springer Nature. https://doi.org/10.1007/978-3-030-80519-7

Imanda, R. A., & Ali, H. (2025). Pengaruh e-wallet, paylater, dan manajemen keuangan pribadi terhadap kemampuan menabung. *Jurnal Greenation Ilmu Akuntansi, 3*(2), 83–94.

Judijanto, L., Ohyver, D. A., Kusumastuti, S. Y., & Masri, M. (2025). *Literasi Keuangan (Teori dan Implementasi).* Sonpedia Publishing Indonesia.

Khaliandri, S. N. R., Hatimatunnisani, H., Farina, F. T., Salsabila, K. S., & Habiburahman, F. (2025). Pengaruh Shopee PayLater dan gaya hidup terhadap pengelolaan keuangan mahasiswa di Politeknik Pajajaran Bandung. *Jurnal Sosio dan Humaniora*, *3*(2), 1–7. https://doi.org/10.59820/soma.v3i2.356

Kurniawan, A. (2024). *Perilaku Konsumen dalam Pemasaran.* Yayasan Putra Adi Dharma.

Lestari, D. (2020). *Manajemen Keuangan Pribadi: Cerdas Mengelola Keuangan.* Deepublish.

Lestari, S. P., Sari, M., Astuty, W., & Wahyuni, S. F. (2025). Financial management within young workers in East Medan: The role of lifestyle, job position, and financial literacy with income as a mediator. *Journal of International Conference Proceedings, 8*(1), 1–16. https://doi.org/10.32535/jicp.v8i1.3979

Melisa, S., Salihi, S., & Meifari, V. (2023). Peran literasi keuangan dalam pengelolaan keuangan mahasiswa STIE Pembangunan Tanjungpinang. *Jurnal Riset Ekonomi, 3*(1), 113–114. https://doi.org/10.53625/juremi.v3i1.6057

Mukuan, D. D. S., Tendean, V. S., & Tampi, J. R. (2023). Pengaruh gaya hidup dan harga terhadap keputusan pembelian produk Starbucks Manado Town Square. *Productivity*, *4*(1), 61–67.

Murtiningsih, D., & Marlapa, E. (2025). *Buku Ajar Perilaku Konsumen*. Deepublish Digital.

Muslimin, M., & Utami, A. P. (2025). *Financial Behavior*. Deepublish Digital.

Nuraisyah, N., Triani, N., & Syahrir, S. N. (2025). Pengaruh literasi keuangan terhadap kinerja keuangan usaha mikro, kecil dan menengah (UMKM) di Kelurahan Anaiwoi Kabupaten Kolaka. *Jurnal Akuntansi Kompetif, 8*(2), 662–668. https://doi.org/10.35446/akuntansikompetif.v8i2.2233

Pambunan, G. S., Halik, J. B., & Mongan, C. J. (2025). Pengaruh literasi keuangan, gaya hidup, dan pendapatan terhadap pengelolaan keuangan pribadi karyawan Gen Z Kota Makassar. *Yos Soedarso Economics Journal, 7*(1), 69–81.

Putri, L. P., Christiana, I., Febriaty, H., & Safira, M. (2024). Pengaruh literasi keuangan dan gaya hidup terhadap pengelolaan keuangan pada Generasi Z di Kota Medan dimediasi oleh perilaku konsumtif. *Competitive Jurnal Akuntansi dan Keuangan*, *8*(2), 203–218. https://doi.org/10.31000/competitive.v8i2.11504

Putri, V. K. A., & Azib, A. (2023). Pengaruh Financial Literacy dan Lifestyle Terhadap Personal Finance. *Jurnal Riset Manajemen dan Bisnis, 3*(1), 1–8. https://doi.org/10.29313/jrmb.v3i1.1776

Rohmad, H., Kurniawati, H., & Prima, E. (2025*). Generasi Z dan Alpha: Potensi, Problem, dan Solusi.* Wawasan Ilmu.

Saputro, E. P., Achyani, F., & Setyaningrum, D. P. (2022). *Digitalisasi Perbankan: Prospek, Tantangan dan Kinerja*. Muhammadiyah University Press.

Sun Life Indonesia. (2025, July 24). *Indeks Ketahanan Finansial Sun Life Indonesia Ungkap Gen-Z sebagai Generasi Paling Rentan di Tengah Tekanan Inflasi, dan Kecenderungan Fokus pada Rencana Keuangan Jangka Pendek*. Sun Life Indonesia. https://www.sunlife.co.id/

Tanoni, M. E., Ann, S., & Amelinda, R. (2025). Exploring the relationship between financial awareness and lifestyle indulgence in influencing personal finance

strategies and investment decisions among Generation Z. *Journal of International Conference Proceedings, 8*(1), 418–433. https://doi.org/10.32535/jicp.v8i1.3943

Wiyanto, H., Aurellia, A., & Patricia, J. C. (2022). Edukasi perilaku keuangan generasi Z pada cashless society di SMK Bhinneka Tunggal Ika. *Prosiding Seri Seminar Nasional ke-IV Universitas Tarumanagara*, *2*(1), 1319–1326. https://doi.org/10.24912/pserina.v2i1.19906

ABOUT THE AUTHOR(S)

1st Author
Fria Firmayani is a student in the Faculty of Social Sciences and Economics, Universitas Sembilanbelas November Kolaka.
Email: friafirmayani2002@gmail.com

2nd Author
Sasmita Nabila Syahrir is a lecturer in the Accounting Study Program, Faculty of Social Sciences and Economics, Universitas Sembilanbelas November Kolaka.
ORCID ID: https://orcid.org/0009-0009-3111-4063

3rd Author
Nichen is a lecturer in the Accounting Study Program, Faculty of Social Sciences and Economics, Universitas Sembilanbelas November Kolaka.